2018 - Ed. 1

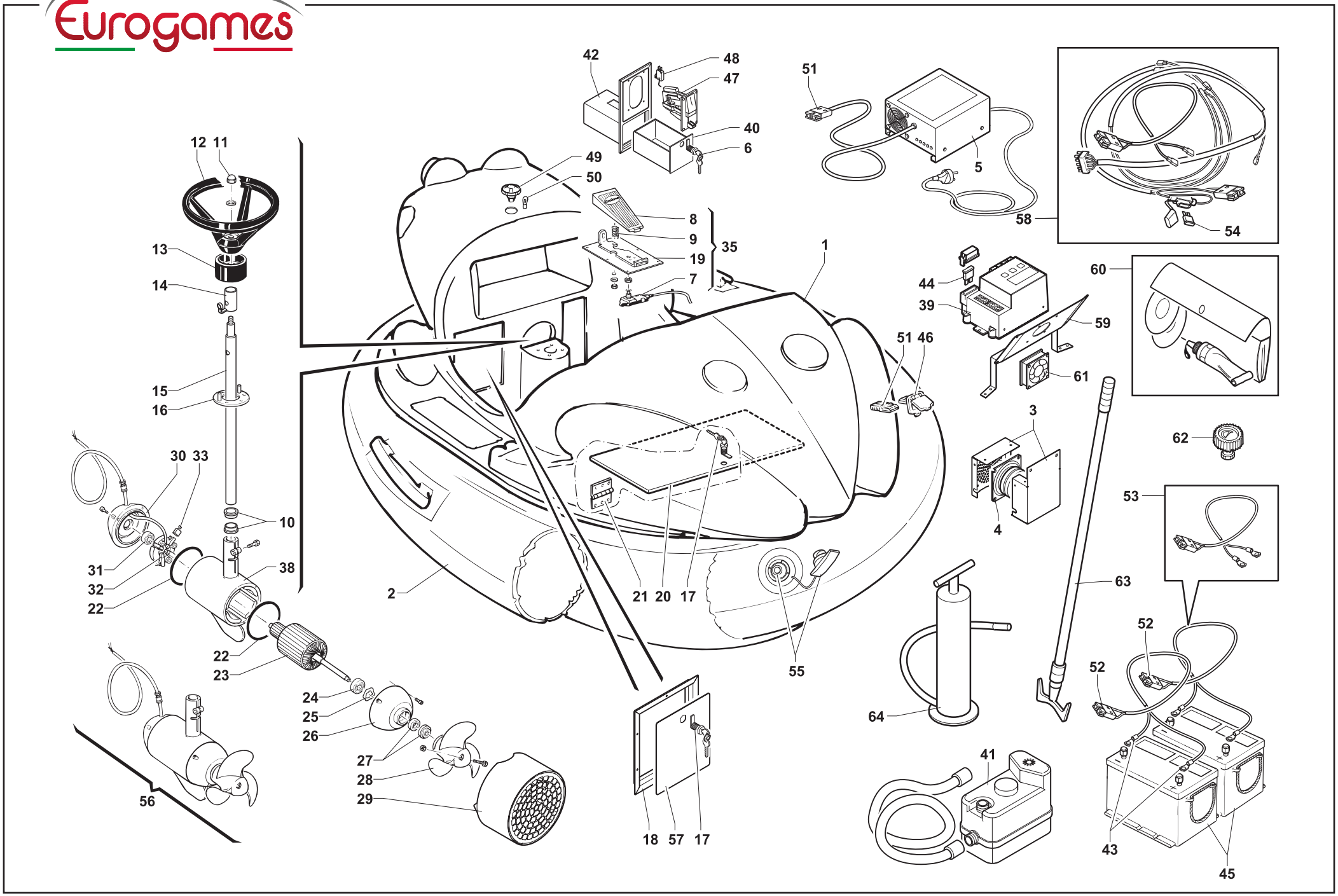
42
48
47
40
6
51
5
58
54
12 11
49
50
8
9
19
7
35
1
13
14
44
39
60
59
51 46
61
15
16
3
62
30 33
10
53
31
32
22
38
4
2
21 20 17
63
22
23
55
52
52
24
25
26
64
27
28
29
41
56
18 57 17
43
45

| Rif. | Codice | Descrizione | Description |
|---|---|---|---|
| 001 | B-LS000544 | Scocca bumper frog | Bumper frog body |
| 002 | MA1-7501 | Gommone bumper ipp.Frog-dolph-cigno-galaxy-willy | Hippocampi-frog-dolphin-cigno rubber dinghy |
| 003 | B-STA000525 | Scatola altoparlante inox compl. | Complete stainless loudspeaker box |
| 004 | 0100 | Altoparlante | Loudspeaker |
| 005 | PA1-4061 | Caricabatterie 24V | Battery charger 24V |
| 006 | 0155 | Serratura 060 | 060 Lock |
| 007 | 7005 | Micro pedale bumper | Bumper pedal microswitch |
| 008 | 0143 | Pedale in plastica | Plastic pedal |
| 009 | 3146 | Molla pedalino | Pedal spring |
| 010 | 7523 | Boccola bumper /B | Bumper/B bushing |
| 011 | MQ0-2423 | Dado m12 | Nut |
| 012 | 7007 | Volante bumper | Bumper boat steering-wheel |
| 013 | 7008 | Supporto PVC nero volante | Steering wheel black PVC support |
| 014 | 7524 | Ferma tubo sterzo /B | Bumper steering-wheel pipe secure |
| 015 | 7522 | Albero sterzo motore bumper /B | Bumper/B engine steering-wheel shaft |
| 016 | 7520 | Flangia battuta sterzo motore /B | Bumper engine steering wrought flange |
| 017 | T-C000608 | Serratura 45050 | 45050 Lock |
| 018 | B-L000538 | Cornice sportello servizi | Utilities door frame |
| 019 | ST0-4647 | Staffa pedale in plastica bumper | Bumper plastic pedal bracket |
| 020 | B-LS000545 | Sedile VTR cigno/frog | Cigno/frog fiberglass seat |
| 021 | MA0-2463T | Cerniera sedile | Stainless steel seat hinge |
| 022 | 7021 | Or motore bumper | Bumper engine o-ring |
| 023 | 7062 | Rotore 24V bumper /04 | Bumper 24V rotor |
| 024 | 7022 | Cuscinetto 35x15x11 | 35X15x11 bearing |
| 025 | 7023 | Rondella spessore motore bumper | Bumper engine washer |
| 026 | 7024R | Calotta lato elica motore bumper boat | Bumper engine propeller side cap |
| 027 | 7015 | Premistop completo | Complete stop press |
| 028 | 7056 | Elica / 2004 | Propeller / 2004 |
| 029 | 7025 | Protezione elica | Propeller protection |
| 030 | EM0-6140R | Calotta SX motore bumper boat | Bumper engine left cap |
| 031 | 7065 | Cuscinetto 32x12x10 ddu | 32X12x10 bearing |
| 032 | EM0-6141 | Portaspazzole compl.Di spazzole | Brush holder with brushes |
| 033 | 7039 | Spazzola motore bumper | Bumper engine brush |
| 035 | SM0-4648 | Pedale bumper boat completo | Bumper boat complete plastic peda |
| 038 | 7032R | Tubo motore bumper | Bumper engine tube |
| 039 | EX1-5011 | Timer digitale EG15 24V | 24V. Digital control box |
| 040 | 0264 | Cassetta gettoni per sport.Gett.M48 | Coin box for m48 coin mechanism door |
| 041 | V-C001755 | Pompa gonfiaggio elettrica 12V | Electric rubber tube inflator |
| 042 | 0263 | Porta cassetta gettoni e getton.M48 | Stainless door for m48 coin mechanism |
| 043 | 0553 | Capicorda a occhiello | Cable terminals for hermertic battery |
| 044 | 0291 | Fusibile maxi 80Amp x digitale | 80 Amp maxi fuse for control box |
| 045 | 0618 | Batteria AGM ermetica 12V 120Ah | 12V 120Ah hermetic battery |
| 045 | 0617 | Batteria AGM ermetica 12V 80 Ah | 12V 80 Ah hermetic battery |
| 046 | 0206B | Supporto rosso spina 24V caricabateria | Red support for 24V battery charger plug |
| 047 | GETT | Gettoniera m48 | M48 coin mechanism |
| 048 | EI0-2750 | Microswitch | Coin mechanism microswitch |
| 049 | 0341A | Portalampada D.50 Inox s/l arancione | Stainl.Steel D.50 Lampholder without orange bulb |
| 050 | 0523 | Lampada LED 24V tuttovetro | 24V LED glass light bulb |

| Rif. | Codice | Descrizione | Description |
|---|---|---|---|
| 051 | 0179 | Spina/presa caricab.Rossa | Red battery charger plug/socket |
| 052 | 0168 | Spina/presa caricabatteria grigia | Grey battery charger plug/socket |
| 053 | 0298 | Cavi batteria D.10 X batt.Ermetica | D.10 Cables for hermetic battery |
| 054 | 0293 | Fusibile 20Amp | 20 Amp. Fuse |
| 055 | 7063 | Tappo valvola gommone | Valve cap for rubber dinghy |
| 056 | EM0-6143R | Motore bumper boat 24V completo | 24V bumper boat engine |
| 057 | B-L000309 | Sportello servizi | Utilities door |
| 058 | 7061 | Cavo scocca bumper boat/04 | Bumper/04 wiring |
| 059 | B-L002236 | Supporto timer | Support for bumper boat control box |
| 060 | 0049 | Kit riparazione gommone | Bumper dinghy maintenance kit |
| 061 | V-C002027 | Ventola per timer 80x80x25 24v | Fan for timer 80x80x25 24V |
| 062 | T-C001751 | Manometro per gommone | Gauge for plastic tube pressure |
| 063 | 7042 | Mezzo marinaio | Extending boat hook |
| 064 | 7043 | Pompa gonfiaggio manuale | Inflate pump |