Eurogames

FUNNY DUCK Cod. **PW5-7200**

2018 - Ed. 1

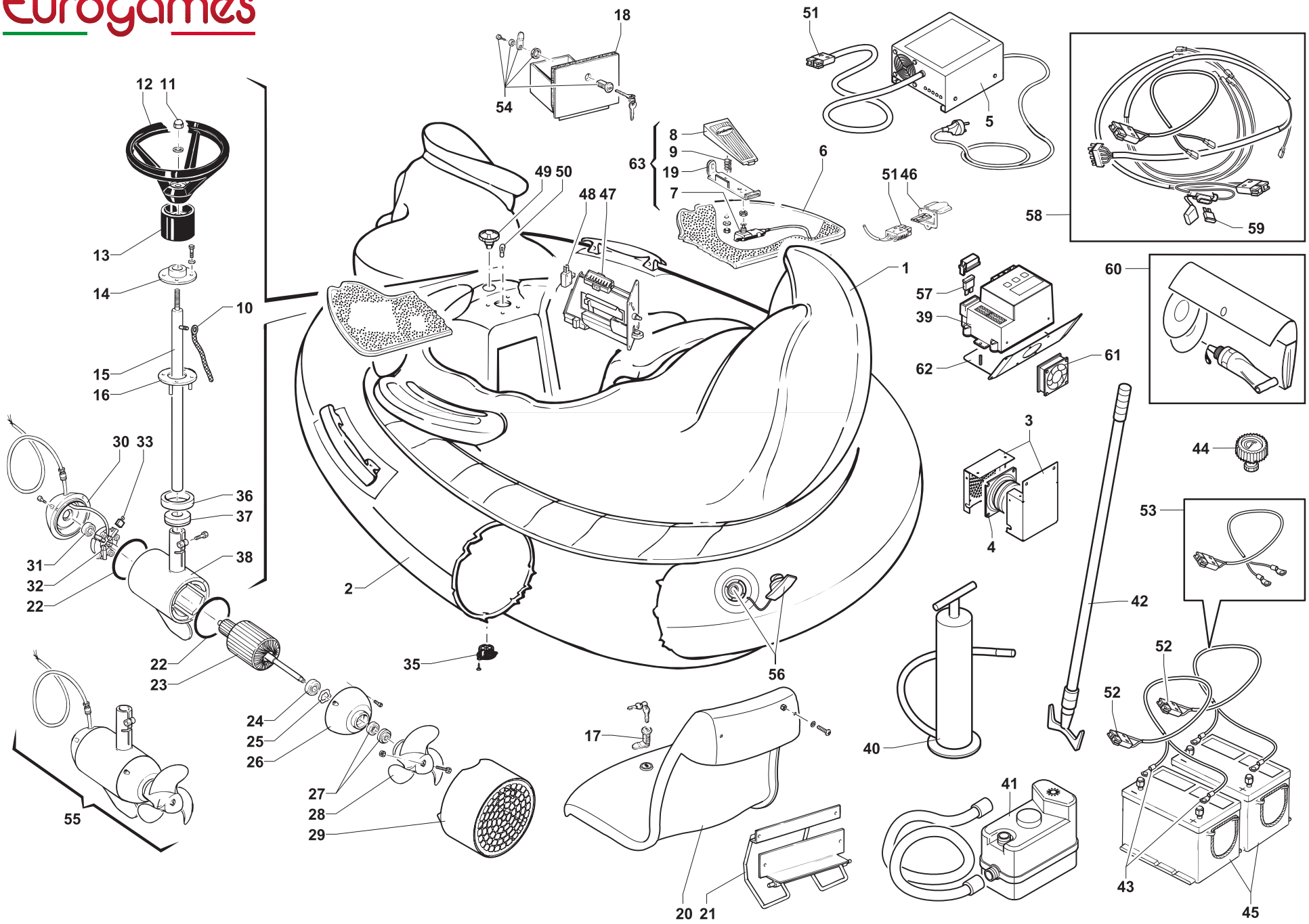

Rif.	Codice	Descrizione	Description
001	7204	Scocca bumper funny duck	Funny duck body
002	MA1-7201	Gommone bumper funny duck	Funny duck rubber dinghy
003	B-STA000525	Scatola altoparlante inox compl.	Complete stainless loudspeaker box
004	0100	Altoparlante	Loudspeaker
005	PA1-4061	Caricabatterie 24V	Battery charger 24V
006	7205	Pedana VTR bumper funnyduck	Funny duck fiberglass feetboard
007	7005	Micro pedale bumper	Bumper pedal microswitch
008	0143	Pedale in plastica	Plastic pedal
009	3146	Molla pedalino	Pedal spring
010	7048	Treccia in rame massa motore	Engine mass copper plait
011	MQ0-2423	Dado m12	Nut
012	7007	Volante bumper	Bumper boat steering-wheel
013	7008	Supporto PVC nero volante	Steering wheel black PVC support
014	7009	Boccola delrin D.100X22bumper	D.100X22 bumper nylon bushing
015	7014	Albero sterzo motore bumper	Engine bumper steering-wheel shaft
016	B-STS001585	Lamiera sterzo	Steering wheel sheet
017	T-C000608	Serratura 45050	45050 Lock
018	7017	Sportello con cass.Gettoni bumper	Bumper coin box with door
019	7058	Staffa pedale in plastica bumper	Bumper plastic pedal bracket
020	7202	Sedile funny duck	Funny duck seat
021	7203	Supporto sedile funny duck	Funny duck seat support
022	7021	Or motore bumper	Bumper engine o-ring
023	7062	Rotore 24V bumper /04	Bumper 24V rotor
024	7022	Cuscinetto 35x15x11	35X15x11 bearing
025	7023	Rondella spessore motore bumper	Bumper engine washer
026	7024R	Calotta lato elica motore bumper boat	Bumper engine propeller side cap
027	7015	Premistop completo	Complete stop press
028	7056	Elica / 2004	Propeller / 2004
029	7025	Protezione elica	Propeller protection
030	EM0-6140R	Calotta SX motore bumper boat	Bumper engine left cap
031	7065	Cuscinetto 32x12x10 DDU	32X12x10 bearing
032	EM0-6141	Portaspazzole compl.Di spazzole	Brush holder with brushes
033	7039	Spazzola motore bumper	Bumper engine brush
035	7029	Valvola scarico bumper	Exhaust valve
036	7030	Boccola PVC D.78,2X15 bumper	D.78,2X15 bumper PVC bushing
037	7031	Boccola teflon D.70X20 bumper	D.70X20 bumper nylon bushing
038	7032R	Tubo motore bumper	Bumper engine tube
039	EX1-5011	Timer digitale EG15 24V	24V. Digital control box
040	7043	Pompa gonfiaggio manuale	Inflate pump
041	V-C001755	Pompa gonfiaggio elettrica 12V	Electric rubber tube inflator
042	7042	Mezzo marinaio	Extending boat hook
043	0553	Capicorda a occhiello	Cable terminals for hermertic battery
044	T-C001751	Manometro per gommone	Gauge for plastic tube pressure
045	0618	Batteria AGM ermetica 12V 120Ah	12V 120Ah hermetic battery
045	0617	Batteria AGM ermetica 12V 80 Ah	12V 80 Ah hermetic battery
046	0206B	Supporto rosso spina 24V caricabateria	Red support for 24V battery charger plug
047	GETT	Gettoniera m48	M48 coin mechanism
048	EI0-2750	Microswitch	Coin mechanism microswitch

Rif.	Codice	Descrizione	Description
049	0341A	Portalampada D.50 Inox s/l arancione	Stainl.Steel D.50 Lampholder without orange bulb
050	0523	Lampada LED 24V tuttovetro	24V LED glass light bulb
051	0179	Spina/presa caricab.Rossa	Red battery charger plug/socket
052	0168	Spina/presa caricabatteria grigia	Grey battery charger plug/socket
053	0298	Cavi batteria D.10 X batt.Ermetica	D.10 Cables for hermetic battery
054	0155	Serratura 060	060 Lock
055	EM0-6143R	Motore bumper boat 24V completo	24V bumper boat engine
056	7063	Tappo valvola gommone	Valve cap for rubber dinghy
057	0291	Fusibile maxi 80Amp x digitale	80 Amp maxi fuse for control box
058	7061	Cavo scocca bumper boat/04	Bumper/04 wiring
059	0293	Fusibile 20Amp	20 Amp. Fuse
060	0049	Kit riparazione gommone	Bumper dinghy maintenance kit
061	V-C002027	Ventola per timer 80x80x25 24V	Fan for timer 80x80x25 24V
062	B-STS001608	Supporto timer bumper boat	Support for bumper boat control box
063	7059	Pedale bumper boat completo	Bumper boat complete plastic pedal

2018 - Ed. 1