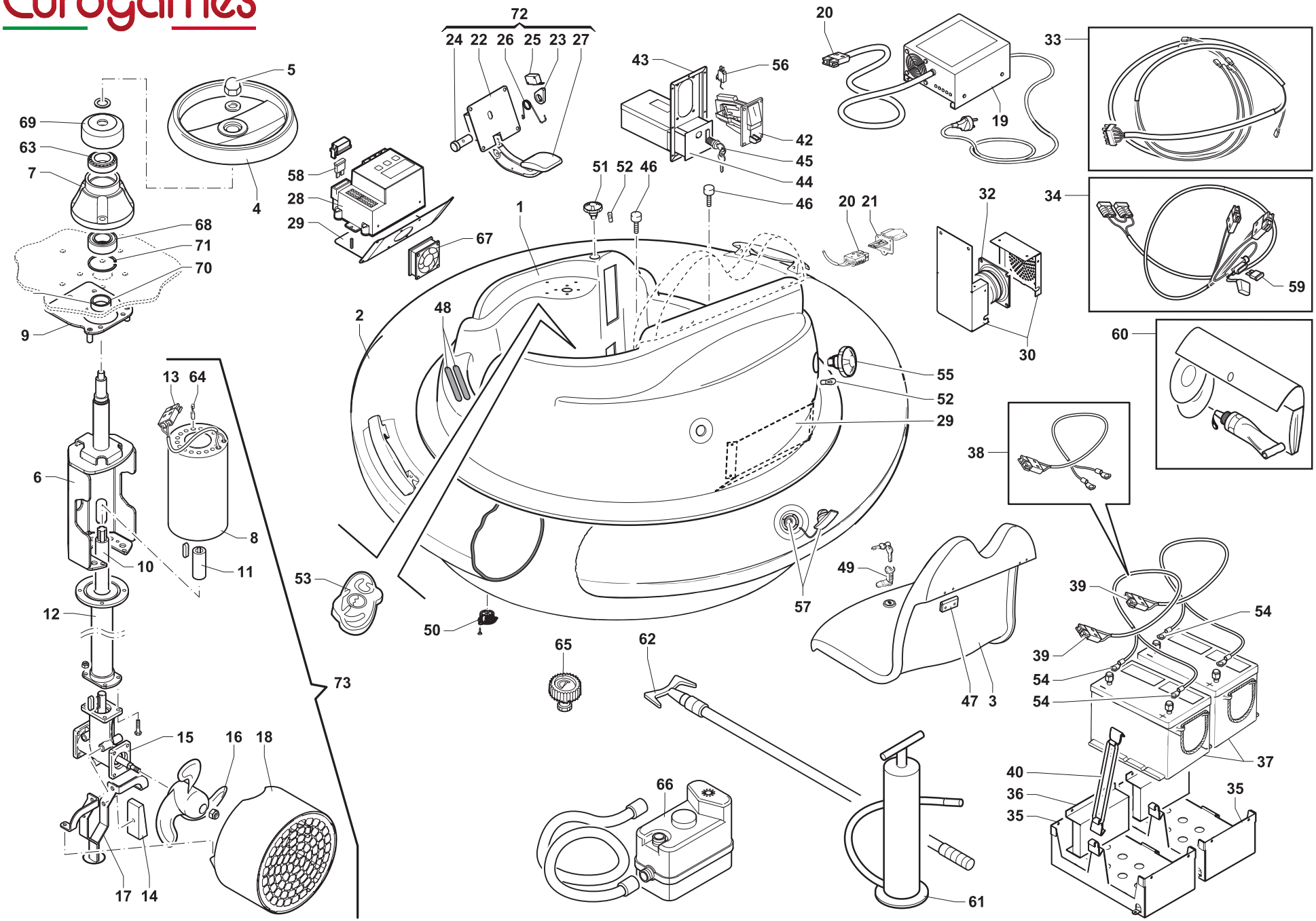
72
24 22 26 25 23 27
5
69
63
7
4
68
71
70
9
58
28
29
67
1
2
48
43
56
42
45
44
46
51 52 46
20
19
33
20 21
32
30
34
59
60
55
52
29
38
13 64
6
8
10
11
12
53
50
57
49
47 3
39
54
39
54
54
37
40
36
35
35
73
65
62
15
16 18
17 14
66
61

Rif.	Codice	Descrizione	Description
001	SS1-1607	Scocca bumper splash 2011	Bumper splash body
002	MA1-7012	Gommone bumper splash	Bumper splash rubber dinghy
003	SS0-1715	Sedile bumper splash 2011	Bumper splash 2011 seat
004	6818	Volante	Steering-wheel
005	MQ0-2423	Dado M12	Nut
006	ST0-4193Z	Struttura vano motore interno	Engine compartment structure
007	MT0-4207V	Boccola sterzo bumper boat	Bumper boat steering-wheel bushing
008	B-CE001255	Motore interno bumper boat	Bumper internal engine
009	ST0-4206	Lamiera sterzo bumper boat	Welded sheet metal steering
010	B-LT001539	Albero motore per motore interno	Motor shaft for inner motor
011	B-LT001513	Boccola per giunto motore interno	Bush for joint
012	B-STS001380	Tubo sterzo bumper boatcompleto	Bumper steering wheel pipe
013	0275	Spina/presa blu motore	Blue plug/socket for engine
014	B-C001576	Anodo zinco piastrina 75/130 HP	Zinc anod plate 75/130 HP
015	B-C001990	Rinvio angolare con albero elica 1:1	Angle driver with propeller shaft
016	7056	Elica / 2004	Propeller / 2004
017	B-STS002003	Staffa supporto coprielica con deriva	Propeller protection fixing clamp
018	7025	Protezione elica	Propeller protection
019	PA1-4061	Caricabatterie 24V	Battery charger 24V
020	0179	Spina/presa caricab.Rossa	Red battery charger plug/socket
021	0206B	Supporto rosso spina 24V caricabateria	Red support for 24V battery charger plug
022	B-STS001321	Lamiera pedale bumper	Bumper pedal sheet
023	B-L000928	Staffa micro pedale	Pedal microswitch clamp
024	B-LT001383	Perno pedale bumper	Bumper pedal pin
025	0153	Micro pedale a lamella	Plastic pedal micro switch
026	MM0-3079	Molla inox	Body closing hinge
027	6104	Pedale in plastica	Plastic pedal
028	EX1-5011	Timer digitale 24V	24V. Digital control box
029	B-STS001608	Supporto timer bumper boat	Support for bumper boat control box
030	B-STA000525	Scatola altoparlante inox compl.	Complete stainless loudspeaker box
032	0100	Altoparlante	Loudspeaker
033	B-CE001634	Cavo scocca bumper splash	Bumper boat body wiring
034	B-CE001471	Cablaggio alimentazione	Power supply cabling
035	B-L000550	Porta batteria inox	Inox battery holder
036	B-L000551	Lamiera distanziale inox	Inox sheet metal spacer
037	0618	Batteria agm ermetica 12V 120Ah	12V 120Ah hermetic battery
037	0617	Batteria agm ermetica 12V 80 Ah	12V 80 Ah hermetic battery
038	0298	Cavi batteria d.10 X batt.Ermetica	D.10 Cables for hermetic battery
039	0168	Spina/presa caricabatteria grigia	Grey battery charger plug/socket
040	T-STA001479	Elastico batteria cm25 con ganci	Complete rubber band for battery
042	GETT	Gettoniera M48	M48 coin mechanism
043	0306	Sportello gettoniera per M48	M48 coin mechanism door
044	0307	Cassetta gettoni per sport. Gett. M48	Coin bor for M48 coin mechanism door
045	0155	Serratura 060	060 Lock
046	0197	Antivibrante 30xh20	30Xh20 anti vibrating
047	0092	Cerniera inox	Stainless hinge
048	0063	Striscia antiscivolo	Anti-skid strip
049	T-C000608	Serratura 45050	45050 Lock

Rif.	Codice	Descrizione	Description
050	7029	Valvola scarico bumper	Exhaust valve
051	0341A	Portalampada d.50 Inox s/l arancione	Stainl. steel d.50 Lampholder without orange bulb
052	0523	Lampada led 24V tuttovetro	24V led glass light bulb
053	SS1-1733	Coperchio valvola splash 2011	Cover for valve splash 2011
054	0553	Capicorda a occhiello	Cable terminals for hermertic battery
055	0340R	Portalampada d.50 griglia s/l rosso	Grid lampholder d.50 Without light bulb red
056	EI0-2750	Microswitch	Coin mechanism microswitch
057	7063	Tappo valvola gommone	Valve cap for rubber dinghy
058	0291	Fusibile maxi 80A x digitale	80A maxi fuse for control box
059	0293	Fusibile 20A	20A Fuse
060	0049	Kit riparazione gommone	Bumper dinghy maintenance kit
061	7043	Pompa gonfiaggio manuale	Inflate pump
062	7042	Mezzo marinaio	Extending boat hook
063	MG0-4305	Cuscinetto 55x30x17	55X30x17 bearing
064	EM0-3088	Spazzola motore bumper interno	Bumper engine brush
065	T-C001751	Manometro per gommone	Gauge for plastic tube pressure
066	V-C001755	Pompa gonfiaggio elettrica 12V	Electric rubber tube inflator
067	V-C002027	Ventola per timer 80x80x25 24V	Fan for timer 80x80x25 24V
068	MG0-4306	Cuscinetto 55x30x19	55X30x19 bearing
069	MT0-4208V	Copertura boccola sterzo bumper boat	Bushing steering covering
070	MB0-4195	Boccola inferiore sterzo	Lower bush steering
071	MA0-4174	Segger	Segger
072	B-STA001385	Pedale bumper boat completo	Bumper boat complete plastic pedal
073	SM0-4537	Assieme Motore Interno 24v Bumper Boat	Bumper Boat 24v Internal Engine Assembly

2017 - Ed. 1